# 1124 1-1/2" Wide General Purposes Caster Series

SX Rubber Wheel Diameter × Wheel Width 150 x 45mm

EAN

YJ-11240600034013

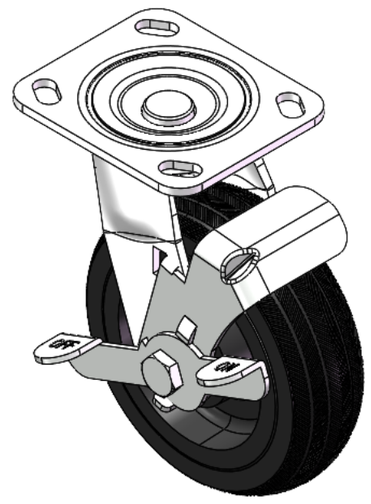

Picture may differ from original product

Drawings are for reference only and may differ from the product

## Technical Data

◉ Metric ○ Imperial

| | |
|---|---|
| Wheel Diameter | 150mm |
| Wheel Width | 45mm |
| Wheel Bearing | Wheels With Ball Bearings |
| Plate Size | 115 x 100mm |
| Bolt Hole Spacing | 85 x 70mm |
| Plate Hole | 20 x 11mm |
| Offset | 39mm |
| Swivel Interference | 334mm |
| Overall Height | 189mm |
| Swivel Radius | 167mm |
| Hardness Of Tread | 85±5° Shore A |
| Load Capacity (Dynamic) | 220kgs |
| Load Capacity (Static) | 330kgs |
| Temperature | -20°C to +120°C |
| Fork Type | Swivel Caster With Front Brake |
| Stainless | N/A |
| Electrical Conductivity | N/A |
| Anti-Static | N/A |
| Weight | 2.89kgs |
| Standard | ISO22883 |

## Advantages at a glance

| | |
|---|---|
| Rolling Resistance | ●●●○○ |
| Operating Noise | ●●●●○ |
| Floor Surface Preservation | ●●●●○ |

## Dimensions

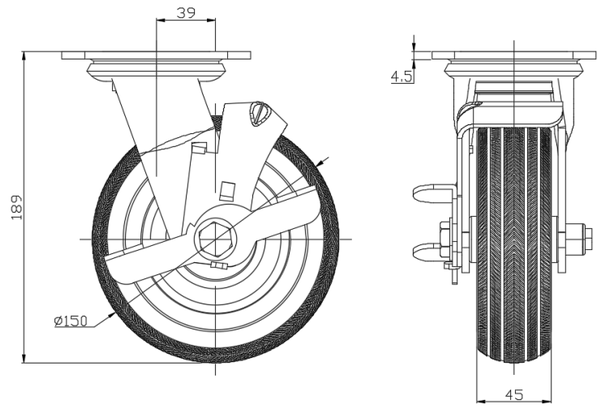


## Mounting

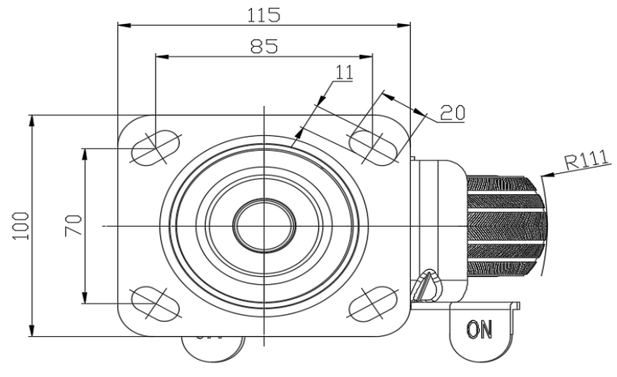


* For any deviation between metric and imperial spec, please refer to the metric spec.

© Copyright 2026 DershengInternational www.dersheng.com