Product Data Sheet

1153 Heavy Duty 2" Wide General Purposes Caster Series

WMRC Wheel Diameter × Wheel Width 150 x 40mm

EAN

TW-4115306004062

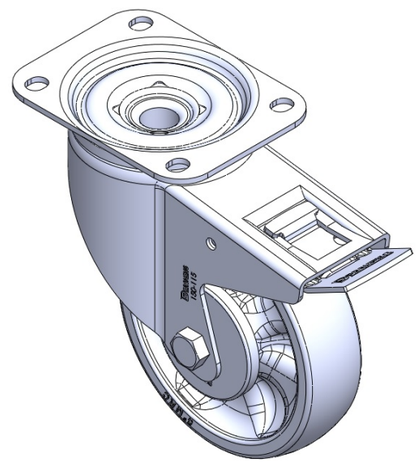

Picture may differ from original product

Casters with front brake and With locking system. Top Plate Riveted and Stamping.
Zine-Plated, Mounting Type - Top Plate, with cover.
Reinforced thermoplastic plastic Wheel Center and Wheel Tread.
Bearings—Ball Bearings.

Wheel surface: Thermoplastic plastic (PA6)
Wheel Center: Thermoplastic plastic (PA6)

Drawings are for reference only and may differ from the product

Technical Data

◉ Metric ○ Imperial

Wheel Diameter	150mm
Wheel Width	40mm
Wheel Bearing	Wheels With Ball Bearings
Plate Size	137 x 105mm
Bolt Hole Spacing	105 x 77.5mm
Plate Hole	13.5 x 11mm
Offset	60mm
Swivel Interference	330mm
Overall Height	190mm
Swivel Radius	165mm
Hardness Of Tread	75±5° Shore D
Load Capacity (Dynamic)	300kgs
Load Capacity (Static)	450kgs
Temperature	-20°C to +80°C
Fork Type	Swivel Caster With Front Brake
Stainless	N/A
Electrical Conductivity	N/A
Anti-Static	N/A
Weight	2.30kgs
Standard	ISO22883

Advantages at a glance

Rolling Resistance	● ● ● ● ●
Operating Noise	● ● ○ ○ ○
Floor Surface Preservation	● ● ○ ○ ○

Dimensions

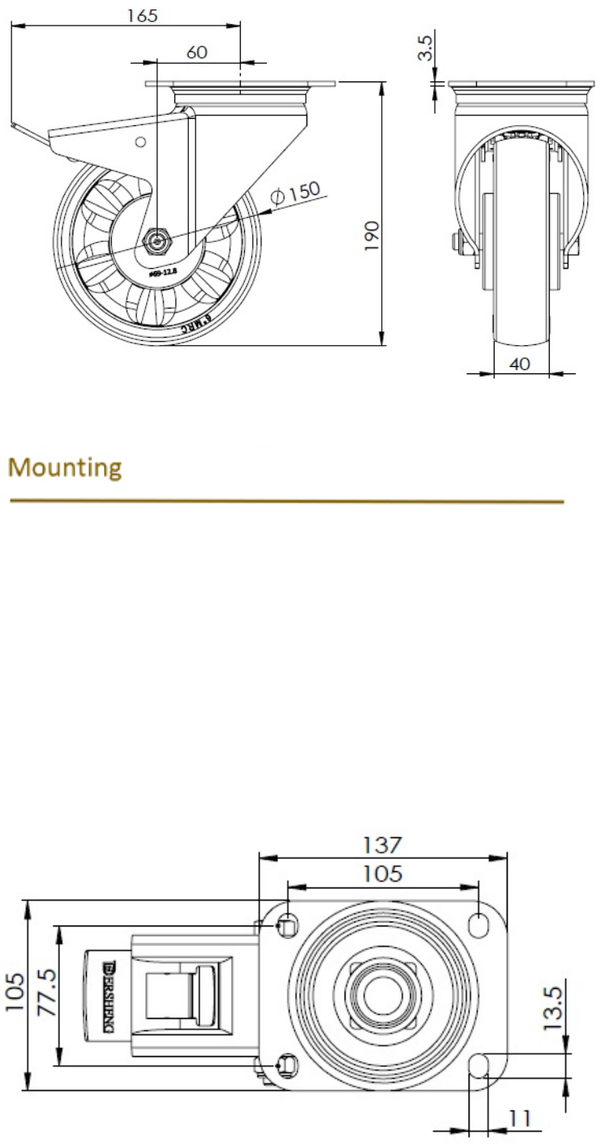

Mounting

* For any deviation between metric and imperial spec, please refer to the metric spec.

© Copyright 2025 DershengInternational www.dersheng.com