1116-SS-MI Medium Duty Institutional Stainless Steel Caster Series

AQPU (grey) wheel Diameter × Wheel Width 100 x 31mm

EAN

TW-4111604001037

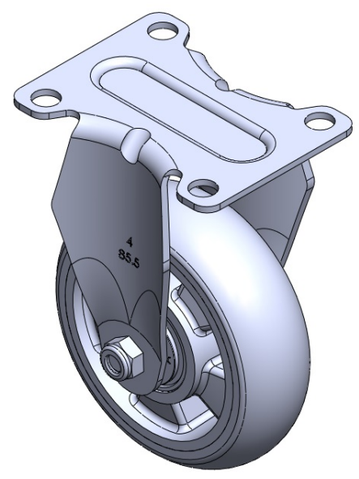

Drawings are for reference only and may differ from the product

Picture may differ from original product

Technical Data

◉ Imperial ○ Metric

Wheel Diameter	4 "
Wheel Width	1-1/4 "
Wheel Bearing	Wheels With Ball Bearings
Plate Size	3-5/8 " x 2-13/16 "
Bolt Hole Spacing	2-7/8 " x 2-1/8 "
Plate Hole	3/8 "
Overall Height	5-1/2 "
Hardness Of Tread	77±5° Shore A
Load Capacity (Dynamic)	298lbs
Load Capacity (Static)	446lbs
Temperature	-4°F to +158°F
Fork Type	Rigid Caster
Stainless	Y
Electrical Conductivity	N/A
Anti-Static	N/A
Weight	1.1lbs
Standard	ISO22883

Advantages at a glance

Rolling Resistance	● ● ● ● ●
Operating Noise	● ● ● ● ●
Floor Surface Preservation	● ● ● ● ●

Dimensions

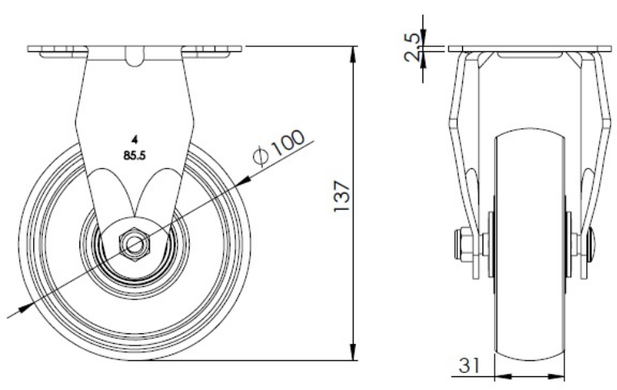

Mounting

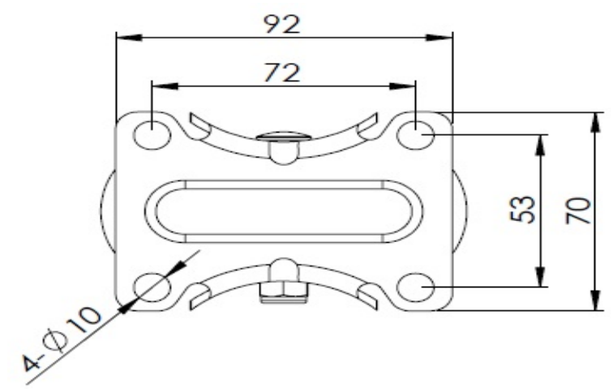

* For any deviation between metric and imperial spec, please refer to the metric spec.

© Copyright 2026 DershengInternational www.dersheng.com