# 1116-SS-MI Medium Duty Institutional Stainless Steel Caster Series

AQPU (grey) wheel Diameter × Wheel Width 100 x 31mm

EAN

TW-4111604001037

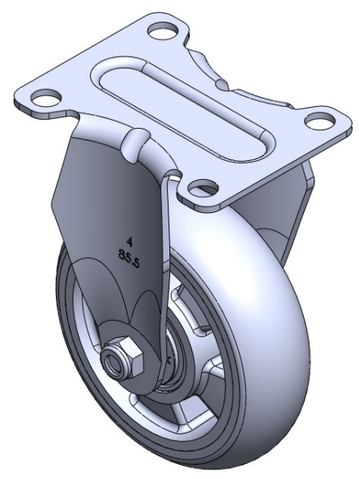

Drawings are for reference only and may differ from the product

Picture may differ from original product

## Technical Data

◉ Metric ○ Imperial

| | |
|---|---|
| Wheel Diameter | 100mm |
| Wheel Width | 31mm |
| Wheel Bearing | Wheels With Ball Bearings |
| Plate Size | 92 x 70mm |
| Bolt Hole Spacing | 72 x 53mm |
| Plate Hole | 10mm |
| Overall Height | 137mm |
| Hardness Of Tread | 77±5° Shore A |
| Load Capacity (Dynamic) | 135kgs |
| Load Capacity (Static) | 202.5kgs |
| Temperature | -20°C to +70°C |
| Fork Type | Rigid Caster |
| Stainless | Y |
| Electrical Conductivity | N/A |
| Anti-Static | N/A |
| Weight | 0.50kgs |
| Standard | ISO22883 |

## Advantages at a glance

| | |
|---|---|
| Rolling Resistance | ● ● ● ● ● |
| Operating Noise | ● ● ● ● ● |
| Floor Surface Preservation | ● ● ● ● ● |

## Dimensions

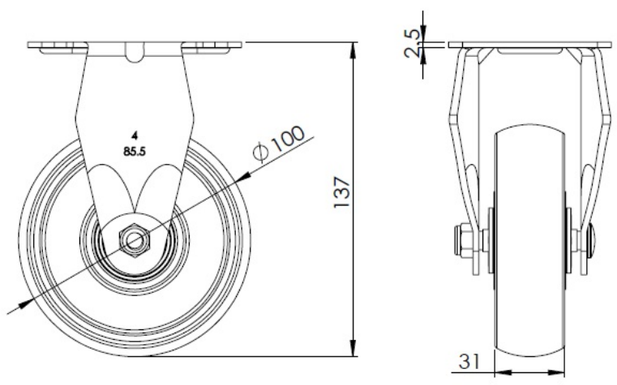


## Mounting

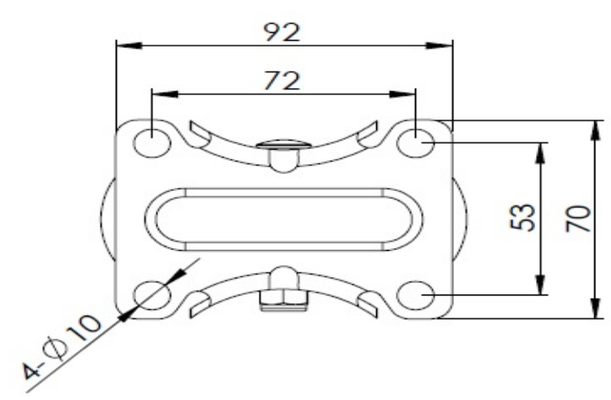


* For any deviation between metric and imperial spec, please refer to the metric spec.

© Copyright 2026 DershengInternational www.dersheng.com