# 1155 STAT Series Caster Series (All Plastic)

DERSHENG
Dersheng Casters Keep Rolling

## Classic PPR Wheel (Pearlescent Dark Gray) Wheel Diameter×Wheel Width 125×31mm

EAN

KS-11550502268073

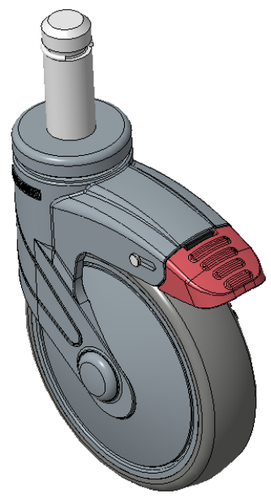

Drawings are for reference only and may differ from the product

Picture may differ from original product

## Technical Data

◉ Imperial ○ Metric

| | |
|---|---|
| Wheel Diameter | 5 " |
| Wheel Width | 1-1/4 " |
| Wheel Bearing | Wheels With Ball Bearings |
| Stem Diameter | 7/8 " |
| Stem Length | 2-1/4 " |
| Offset | 1-1/2 " |
| Swivel Interference | 9 " |
| Overall Height | 6-1/2 " |
| Swivel Radius | 4-1/2 " |
| Hardness Of Tread | 82±5° Shore A |
| Load Capacity (Dynamic) | 198lbs |
| Load Capacity (Static) | 298lbs |
| Temperature | -4°F to +140°F |
| Fork Type | Swivel Caster With Total Brake |
| Stainless | N/A |
| Electrical Conductivity | N/A |
| Anti-Static | N/A |
| Weight | 2.1lbs |
| Standard | ISO22881 |

## Advantages at a glance

| | |
|---|---|
| Rolling Resistance | ● ● ● ● ○ |
| Operating Noise | ● ● ● ● ○ |
| Floor Surface Preservation | ● ● ● ● ● |

## Dimensions

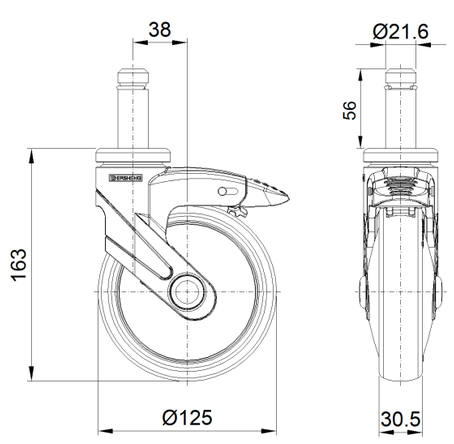


## Mounting

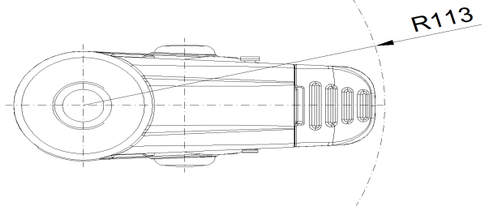


* For any deviation between metric and imperial spec, please refer to the metric spec.

© Copyright 2026 DershengInternational www.dersheng.com