Product Data Sheet

1152 Anti-Friction Caster (B Type) Series

PU (red round) Wheel Diameter x Wheel Width 150x 42mm

EAN

KS-11520600332331

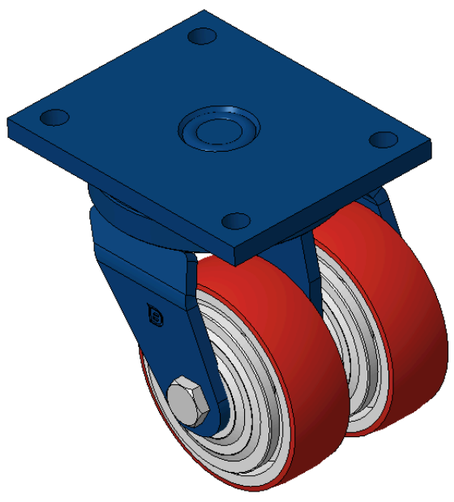

Picture may differ from original product

Portable Casters, Welded Caster Fork, blue painted finish
Base plate Mounting Type device, 140x105mm Bolt Hole Spacing
Cast Iron Wheel Center, High Quality Polyurethane Wheel Tread, Cast Iron red
Bearings—Ball Bearings

Wheel Tread: Hhigh-Quality Polyurethane
Wheel Center: Iron core / Cast iron core

Drawings are for reference only and may differ from the product

Technical Data

◉ Metric ○ Imperial

Wheel Diameter	150mm
Wheel Width	42mm
Wheel Bearing	Wheels With Ball Bearings
Plate Size	175 x 140mm
Bolt Hole Spacing	140x105mm
Plate Hole	15mm
Offset	55mm
Swivel Interference	214mm
Overall Height	215mm
Swivel Radius	107mm
Hardness Of Tread	93±5° Shore A
Load Capacity (Dynamic)	612kgs
Load Capacity (Static)	918kgs
Temperature	-20°C to +70°C
Fork Type	Swivel Caster
Stainless	N/A
Electrical Conductivity	N/A
Anti-Static	N/A
Weight	9.75kgs
Standard	ISO22883

Advantages at a glance

Rolling Resistance	○○○○○
Operating Noise	●●●●○
Floor Surface Preservation	●●●●○

Dimensions

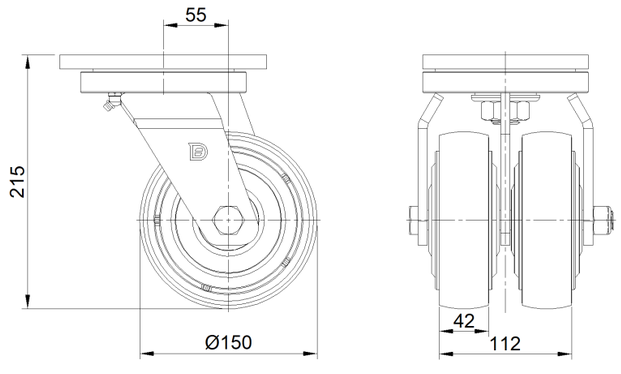

Mounting

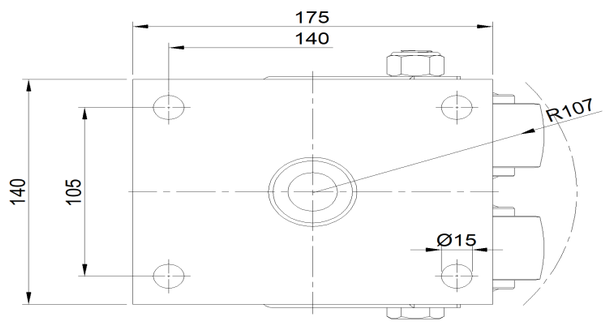

Drawings are for reference only and may differ from the product.

* For any deviation between metric and imperial spec, please refer to the metric spec.

© Copyright 2026 DershengInternational www.dersheng.com