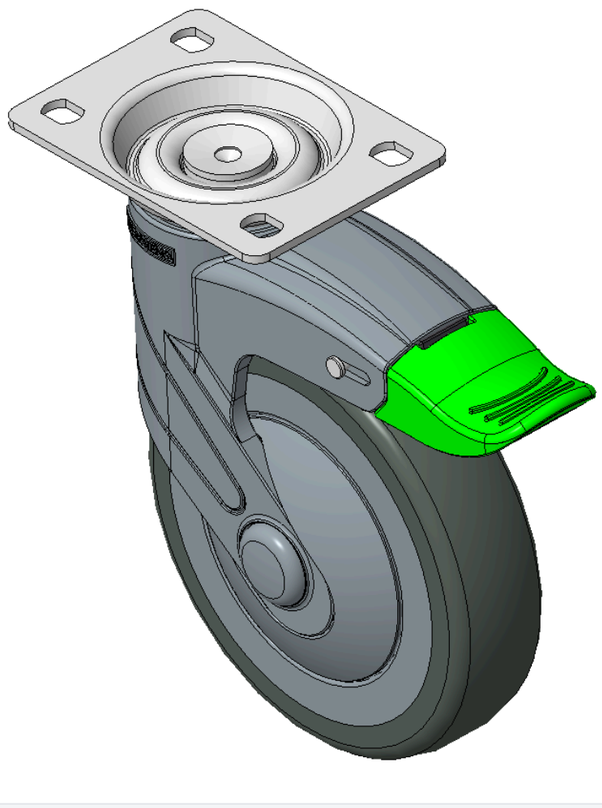

Picture may differ from original product



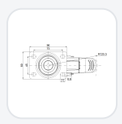

1155 STAT Series Caster Series (All Plastic)

# Resolute (blue gray) Wheel Diameter × Wheel Width 125 x 31mm

KS-11550500454233H Copy model no.

| Wheel Diameter | Load Capacity (Dynamic) | Overall Height | Wheel Bearing |
|---|---|---|---|
| 125mm | 100kgs | 165.5mm | Wheels With Ball Bearings |

- 90-degree directional extra-long Total Brake Casters, 75×45mm perforated Top Plate
- Blue-gray polyamide legs, Zine-Plated Top Plate, Mounting Type - Top Plate device
- High-Quality Impact-Resistant Polypropylene Wheel Center, High-Quality Reinforced Polypropylene Rubber (TPR) Wheel Tread
- Dark gray, Bearing—Ball Bearings.
- Wheel tread: Thermoplastic rubber elastomer (TPR)
- Wheel Center: Made of high-quality impact-resistant polypropylene

Product descriptions are for reference only. The actual product shall prevail.

Product Data Sheet (Metric) | 3D Drawing Request

3D drawings are for members only. Please log in to download.

## Product Data Sheet

Metric | Imperial

| | | | |
|---|---|---|---|
| Wheel Diameter | 125mm | Wheel Width | 31mm |
| Wheel Bearing | Wheels With Ball Bearings | Plate Size | 96 x 69mm |
| Bolt Hole Spacing | 75 x 45mm | Plate Hole | 11 x 8.6mm |
| Offset | 38mm | Swivel Interference | 220mm |
| Overall Height | 165.5mm | Swivel Radius | 110mm |
| Hardness Of Tread | 72±5° Shore A | Load Capacity (Dynamic) | 100kgs |
| Load Capacity (Static) | 135kgs | Temperature | -20°C to +60°C |
| Fork Type | Swivel Caster With Total Brake | Stainless | N/A |
| Electrical Conductivity | N/A | Anti-Static | N/A |
| Weight | 0.63kgs | Standard | ISO22881 |

* For any deviation between metric and imperial spec, please refer to the metric spec.

## Performance

**Rolling Smoothness**
Max. 5 points Score: 5

**Quiet Operation**
Max. 5 points Score: 5

**Floor Surface Preservation**
Max. 5 points Score: 5

## Downloads

PDF **1155-EN-KS2026111208.pdf**
Product Data Sheet (Metric)

3D **1155-CN-KS2026111208-d261112153454.rar**
3D drawings are for members only. Please log in to download.

## Related Products



1155 STAT Series Caster Series (All Plastic)
**Resolute (blue gray) Wheel Diameter × Wheel Width 125 x…**
KS-11550500454053

| wheel diameter | dynamic load | overall height |
|---|---|---|
| 125 mm | 100 kg | 165.5 mm |

View specs →

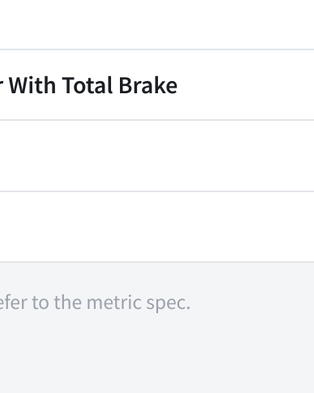

1155 STAT Series Caster Series (All Plastic)
**Resolute (blue gray) Wheel Diameter × Wheel Width 125 x…**
KS-11550500454243

| wheel diameter | dynamic load | overall height |
|---|---|---|
| 125 mm | 100 kg | 165.5 mm |

View specs →

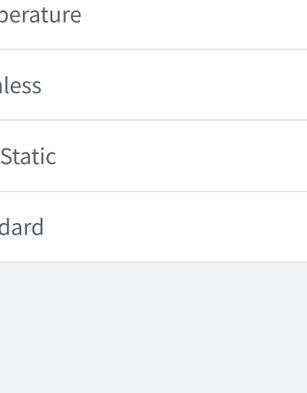

1155 STAT Series Caster Series (All Plastic)
**Resolute (blue gray) Wheel Diameter × Wheel Width 125 x…**
KS-11550500451033

| wheel diameter | dynamic load | overall height |
|---|---|---|
| 125 mm | 100 kg | 165.5 mm |

View specs →



1155 STAT Series Caster Series (All Plastic)
**Resolute (blue gray) Wheel Diameter × Wheel Width 125 x…**
KS-11550500454093

| wheel diameter | dynamic load | overall height |
|---|---|---|
| 125 mm | 90 kg | 165.5 mm |

View specs →