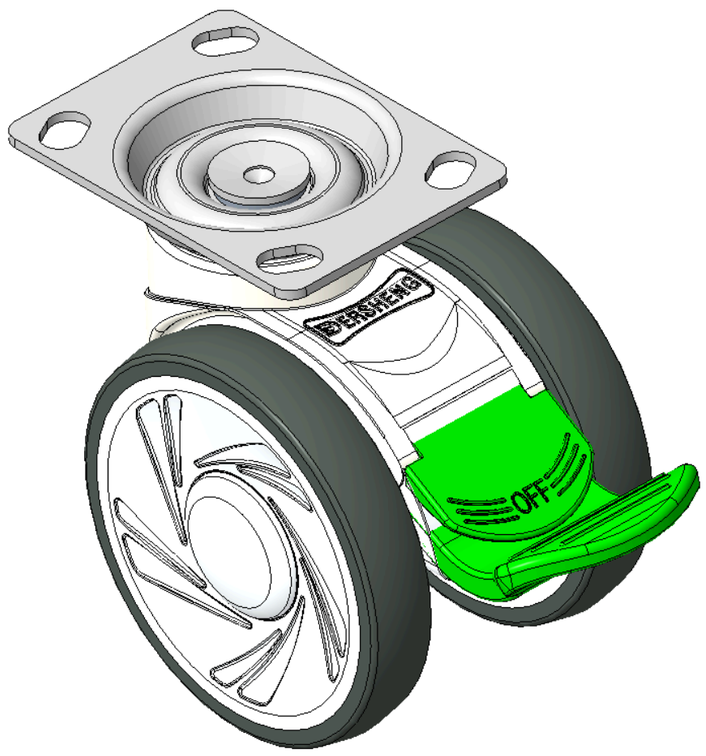

Picture may differ from original product



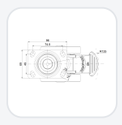

1146 46 Ascendant Series Caster Series(All Plastic)

Double-Ball Full-Effect Wheel (White-Dark Gray) Wheel Diameter × Wheel Width 100 × 18mm

KS-11460400454223 Copy model no.

Wheel Diameter	Load Capacity (Dynamic)	Overall Height	Wheel Bearing
100mm	100kgs	123mm	Wheels With Ball Bearings

- Equipped with directional brakes, Top Plate Bolt Hole Spacing 74.5x49
- White legs made of polyamide reinforced material
- Rust-proof, Corrosion resistant, Smooth rotation, suitable for low and medium-sized trolleys
- High-Quality Impact-Resistant Polypropylene Wheel Center, High-Quality Reinforced Polypropylene Rubber (TPR) Wheel Tread
- White and dark gray, Bearing - Ball Bearings
- Wheel tread: Thermoplastic rubber elastomer (TPR)
- Wheel Center: Made of high-quality impact-resistant polypropylene

Product descriptions are for reference only. The actual product shall prevail.

Product Data Sheet (Metric) | 3D Drawing Request

3D drawings are for members only. Please log in to download.

Product Data Sheet

Metric | Imperial

Wheel Diameter	100mm	Wheel Width	85mm
Wheel Bearing	Wheels With Ball Bearings	Plate Size	96 x 69mm
Bolt Hole Spacing	74.5×49mm	Plate Hole	15 x 10mm
Offset	32mm	Swivel Interference	250mm
Overall Height	123mm	Swivel Radius	125mm
Hardness Of Tread	82±5° Shore A	Load Capacity (Dynamic)	100kgs
Load Capacity (Static)	150kgs	Temperature	-20°C to +60°C
Fork Type	Swivel Caster With Directional Lock	Stainless	N/A
Electrical Conductivity	N/A	Anti-Static	N/A
Weight	0.75kgs	Standard	ISO22881

* For any deviation between metric and imperial spec, please refer to the metric spec.

Performance

Rolling Smoothness
Max. 5 points Score: 4

Quiet Operation
Max. 5 points Score: 4

Floor Surface Preservation
Max. 5 points Score: 5

Downloads

PDF **1146-EN-KS2026102724.pdf**
Product Data Sheet (Metric)

3D **KS-11460400454223.rar**
3D drawings are for members only. Please log in to download.

© 2026 DERSHENG CO., LTD. All rights reserved.