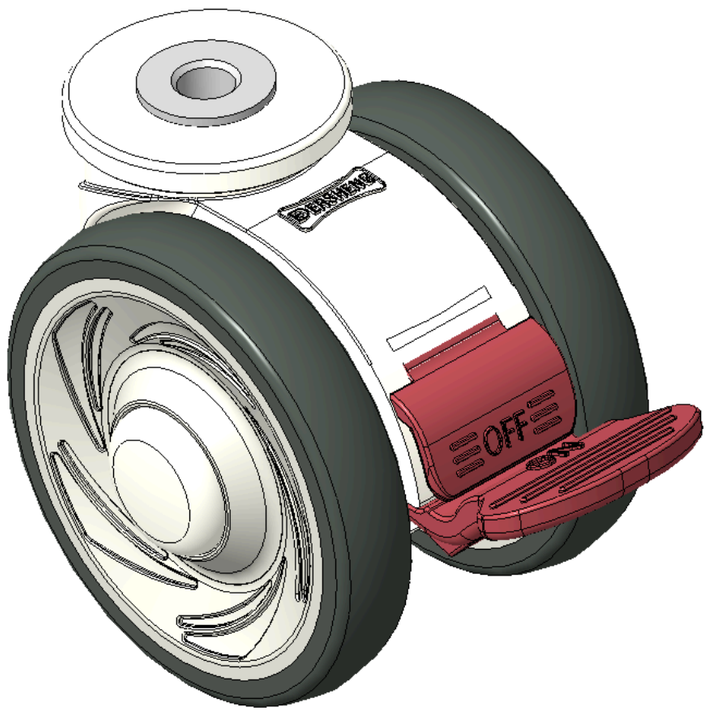

Picture may differ from original product


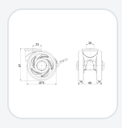
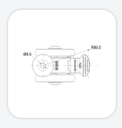

1146 46 Ascendant Series Caster Series(All Plastic)

Double-Ball Full-Effect Wheel (White-Dark Gray) Wheel Diameter × Wheel Width 75 × 14mm

KS-11460300269433 Copy model no.

Wheel Diameter	Load Capacity (Dynamic)	Overall Height	Wheel Bearing
75mm	90kgs	81mm	Wheels With Ball Bearings

- Short Total Brake Casters, Single Bolthole polyamide legs — hollow Ø8.5
- Legged legs are made of polyamide reinforced material
- Rust-proof, Corrosion resistant, Attractive appearance, Economical, and allows for Smooth rotation
- High-Quality Impact-Resistant Polypropylene Wheel Center, High-Quality Reinforced Polypropylene Rubber (TPR) Wheel Tread
- Dark gray, Bearing — Ball Bearings
- Wheel tread: Thermoplastic rubber elastomer (TPR)
- Wheel Center: Made of high-quality impact-resistant polypropylene

Product descriptions are for reference only. The actual product shall prevail.

Product Data Sheet (Metric) | 3D Drawing Request

3D drawings are for members only. Please log in to download.

Product Data Sheet

Metric | Imperial

Wheel Diameter	75mm	Wheel Width	60mm
Wheel Bearing	Wheels With Ball Bearings	Single Bolt HoleCentre Hole	8.5mm
Offset	23mm	Swivel Interference	179mm
Overall Height	81mm	Swivel Radius	89.5mm
Hardness Of Tread	82±5° Shore A	Load Capacity (Dynamic)	90kgs
Load Capacity (Static)	135kgs	Temperature	-20°C to +60°C
Fork Type	Swivel Caster With Total Brake	Stainless	N/A
Electrical Conductivity	N/A	Anti-Static	N/A
Weight	0.32kgs	Standard	ISO22881

* For any deviation between metric and imperial spec, please refer to the metric spec.

Performance

Rolling Smoothness
Max. 5 points Score: 4

Quiet Operation
Max. 5 points Score: 4

Floor Surface Preservation
Max. 5 points Score: 5

Applications

Ideal for indoor equipment and carts that are moved often and need quiet rolling and stable positioning.

- **Food Factories & Food Service:** Central kitchens, bakery areas, food prep areas, worktable carts, food carts and ingredient carts.
- **Manufacturing & Automated Lines:** Production equipment, fixture carts, inspection machines, material transfer carts and mobile workstations.
- **Laboratories & Cleanrooms:** Precision instruments, testing equipment, lab carts and mobile workbenches.

Compatible Equipment

Can be fitted to all kinds of equipment and carriers that need to move, turn or be positioned.

- **Tool & Workbench Carts:** Maintenance tool carts, parts carts, assembly carts and mobile workstations.
- **Display & Mobile Units:** Display racks, display carts, mobile cabinets and retail fixtures.
- **Material Handling Carts:** Material carts, platform trucks, roll cages, picking carts and transfer carts.
- **Automation Peripherals:** Mobile fixtures, peripheral workstations and equipment carriers.

Suitable Floors

Suitable for most flat, hard indoor floors; final selection should still consider load, wheel diameter, wheel material and frequency of use.

- **Epoxy / PU Floors:** Common in factories, laboratories and commercial spaces; suited to frequent pushing.
- **Tile, Stone & Marble Floors:** For healthcare, office, retail and premium indoor spaces; low-noise, floor-friendly wheel materials are recommended.
- **Indoor Industrial Floors:** For most manufacturing, processing and logistics environments.
- **PVC / Vinyl Floors:** For healthcare, office, commercial and home spaces; quieter, floor-protecting wheel materials are recommended.

Downloads

PDF **1146-EN-KS2026102406.pdf**
Product Data Sheet (Metric)

3D **KS-11460300269433.rar**
3D drawings are for members only. Please log in to download.

Related Products