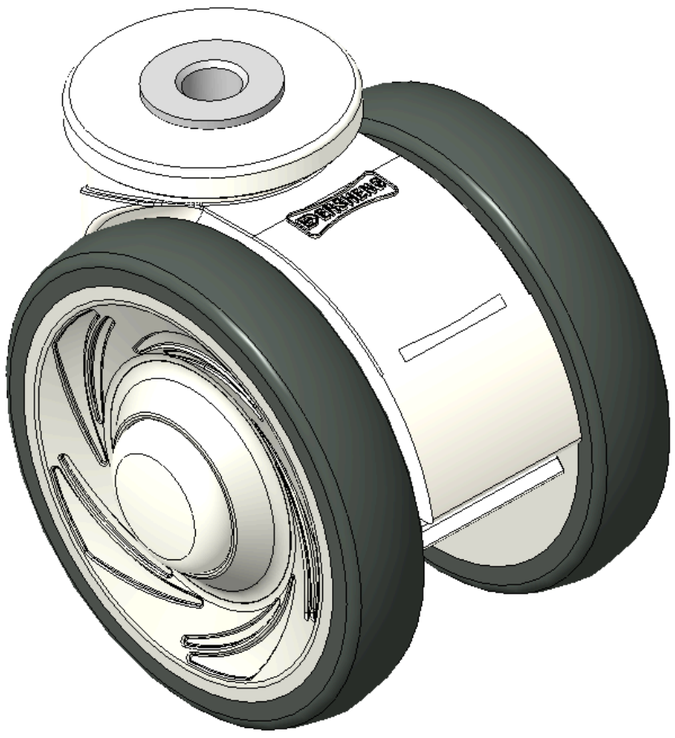

Picture may differ from original product



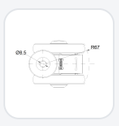

1146 46 Ascendant Series Caster Series(All Plastic)

# Double-Ball Full-Effect Wheel (White-Dark Gray) Wheel Diameter × Wheel Width 75 × 14mm

KS-11460300269233 Copy model no.

| Wheel Diameter | Load Capacity (Dynamic) | Overall Height | Wheel Bearing |
|---|---|---|---|
| 75mm | 90kgs | 81mm | Wheels With Ball Bearings |

- Adjustable Casters, Single Bolthole polyamide legs — hollow Ø8.5
- White legs are made of polyamide reinforcement.
- Rust-proof, Corrosion resistant, Attractive appearance, Economical, and allows for Smooth rotation.
- High-Quality Impact-Resistant Polypropylene Wheel Center, High-Quality Reinforced Polypropylene Rubber (TPR) Wheel Tread.
- Dark gray, Bearing — Ball Bearings.
- Wheel tread: Thermoplastic rubber elastomer (TPR)
- Wheel Center: Made of high-quality impact-resistant polypropylene

Product descriptions are for reference only. The actual product shall prevail.

Product Data Sheet (Metric) | 3D Drawing Request

3D drawings are for members only. Please log in to download.

## Product Data Sheet

Metric | Imperial

| | | | |
|---|---|---|---|
| Wheel Diameter | **75mm** | Wheel Width | **60mm** |
| Wheel Bearing | **Wheels With Ball Bearings** | Single Bolt HoleCentre Hole | **8.5mm** |
| Offset | **23mm** | Swivel Interference | **134mm** |
| Overall Height | **81mm** | Swivel Radius | **67mm** |
| Hardness Of Tread | **82±5° Shore A** | Load Capacity (Dynamic) | **90kgs** |
| Load Capacity (Static) | **135kgs** | Temperature | **-20°C to +60°C** |
| Fork Type | **Swivel Caster With Total Brake** | Stainless | **N/A** |
| Electrical Conductivity | **N/A** | Anti-Static | **N/A** |
| Weight | **0.23kgs** | Standard | **ISO22881** |

* For any deviation between metric and imperial spec, please refer to the metric spec.

## Performance

**Rolling Smoothness**
Max. 5 points Score: 4

**Quiet Operation**
Max. 5 points Score: 4

**Floor Surface Preservation**
Max. 5 points Score: 5

## Applications

Ideal for indoor equipment and carts that are moved often and need quiet rolling and stable positioning.

- **Food Factories & Food Service:** Central kitchens, bakery areas, food prep areas, worktable carts, food carts and ingredient carts.
- **Manufacturing & Automated Lines:** Production equipment, fixture carts, inspection machines, material transfer carts and mobile workstations.
- **Laboratories & Cleanrooms:** Precision instruments, testing equipment, lab carts and mobile workbenches.
- **Tool & Workbench Carts:** Maintenance tool carts, parts carts, assembly carts and mobile workstations.
- **Material Handling Carts:** Material carts, platform trucks, roll cages, picking carts and transfer carts.
- **Display & Mobile Units:** Display racks, display carts, mobile cabinets and retail fixtures.
- **Automation Peripherals:** Mobile fixtures, peripheral workstations and equipment carriers.

## Compatible Equipment

Can be fitted to all kinds of equipment and carriers that need to move, turn or be positioned.

## Suitable Floors

Suitable for most flat, hard indoor floors; final selection should still consider load, wheel diameter, wheel material and frequency of use.

- **Epoxy / PU Floors:** Common in factories, laboratories and commercial spaces; suited to frequent pushing.
- **Tile, Stone & Marble Floors:** For healthcare, office, retail and premium indoor spaces; low-noise, floor-friendly wheel materials are recommended.
- **Indoor Industrial Floors:** For most manufacturing, processing and logistics environments.
- **PVC / Vinyl Floors:** For healthcare, office, commercial and home spaces; quieter, floor-protecting wheel materials are recommended.

## Downloads

PDF **KS-114603002692333.pdf**
Product Data Sheet (Metric)

3D **KS-11460300269233.rar**
3D drawings are for members only. Please log in to download.

## Related Products