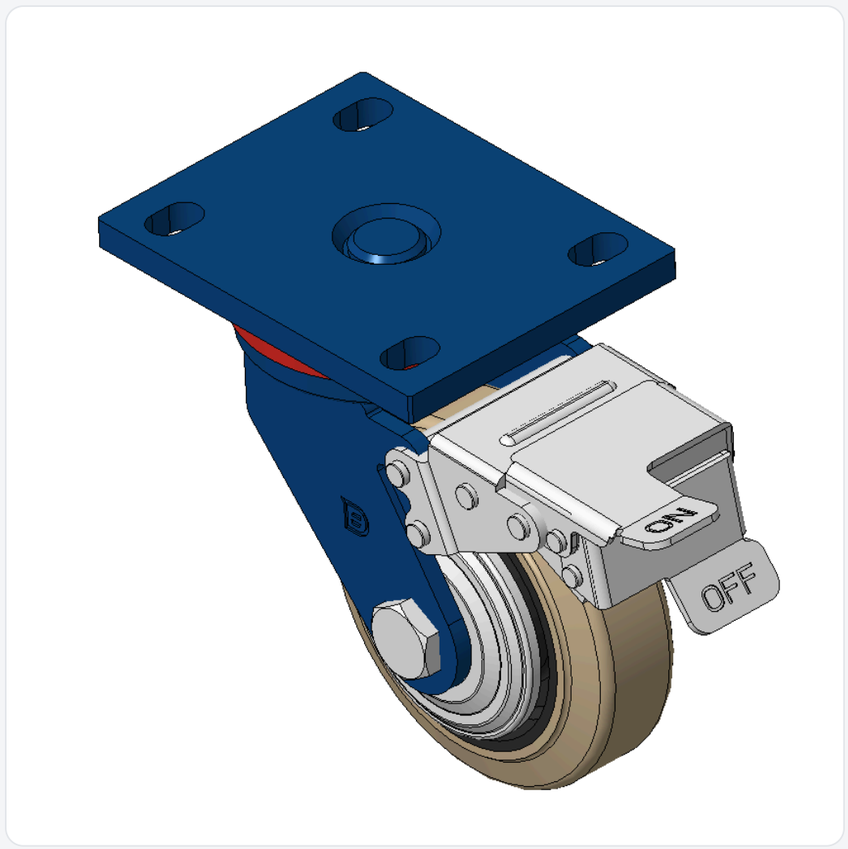

Picture may differ from original product



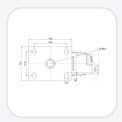

1102 B Type Caster Series

Non-marking NBR Rubber (milling) Wheel Diameter x Wheel Width 125 x 40mm

KS-11020500044121 Copy model no.

Wheel Diameter	Load Capacity (Dynamic)	Overall Height	Wheel Bearing
125mm	335kgs	170mm	Wheels With Ball Bearings

- Equipped with front brake, With locking system Casters, Welded Caster Fork.
- Blue painted finish, Mounting Type - Top Plate, 105x77.5mm Bolt Hole Spacing.
- Cast Iron Wheel Center, High-Quality, high-elasticity rubber rim.
- Bearings—Ball Bearings.
- Wheel surface: Made of high-quality, high-elasticity rubber
- Wheel Center: Iron core / Cast iron core

Product descriptions are for reference only. The actual product shall prevail.

Product Data Sheet (Metric) | 3D Drawing Request

3D drawings are for members only. Please log in to download.

Product Data Sheet

Metric | Imperial

Wheel Diameter	125mm	Wheel Width	40mm
Wheel Bearing	Wheels With Ball Bearings	Plate Size	140 x 110mm
Bolt Hole Spacing	105 x 77.5mm	Plate Hole	20 x 13mm
Offset	45mm	Swivel Interference	317mm
Overall Height	170mm	Swivel Radius	158.5mm
Hardness Of Tread	85±5° Shore A	Load Capacity (Dynamic)	335kgs
Load Capacity (Static)	502.5kgs	Temperature	-20°C to +80°C
Fork Type	Swivel Caster With Front Brake	Stainless	N/A
Electrical Conductivity	N/A	Anti-Static	N/A
Weight	3.7kgs	Standard	ISO22883

* For any deviation between metric and imperial spec, please refer to the metric spec.

Performance

Rolling Smoothness
Max. 5 points Score: 3

Quiet Operation
Max. 5 points Score: 4

Floor Surface Preservation
Max. 5 points Score: 4

Downloads

PDF **1102-EN-KS2026112314.pdf**
Product Data Sheet (Metric)

3D **1102-CN-KS2026112314-d261123175013.rar**
3D drawings are for members only. Please log in to download.

Related Products

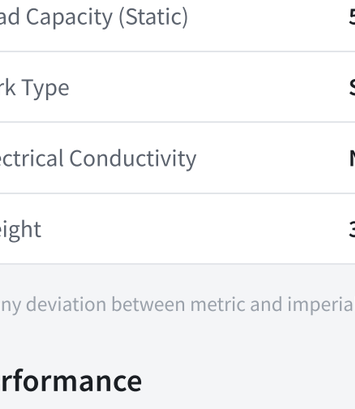

1102 B Type Caster Series
Non-marking NBR Rubber (milling) Wheel Diameter x Wheel Width 12…
KS-11020500041051

wheel diameter	dynamic load	overall height
125 mm	200 kg	170 mm

View specs →

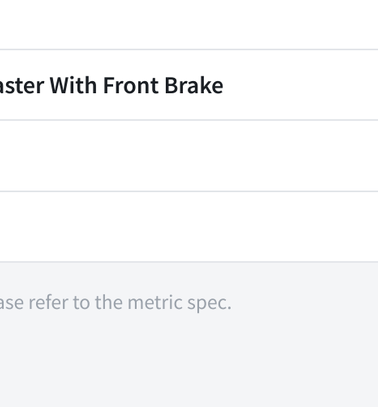

1102 B Type Caster Series
Non-marking NBR Rubber (milling) Wheel Diameter x Wheel Width 12…
KS-11020500041061

wheel diameter	dynamic load	overall height
125 mm	200 kg	170 mm

View specs →

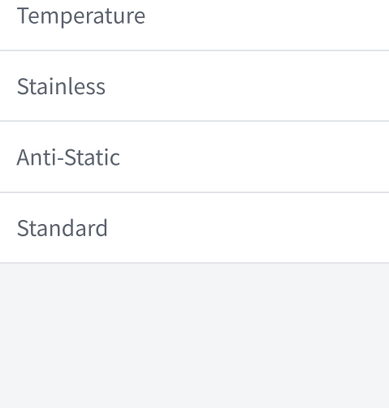

1102 B Type Caster Series
Non-marking NBR Rubber (milling) Wheel Diameter x Wheel Width 12…
KS-11020500042051

wheel diameter	dynamic load	overall height
125 mm	200 kg	170 mm

View specs →

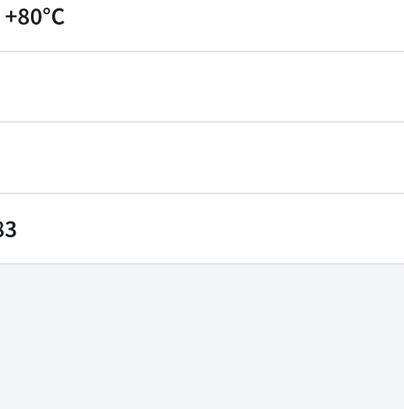

1102 B Type Caster Series
Non-marking NBR Rubber (milling) Wheel Diameter x Wheel Width 12…
KS-11020500042061

wheel diameter	dynamic load	overall height
125 mm	200 kg	170 mm

View specs →