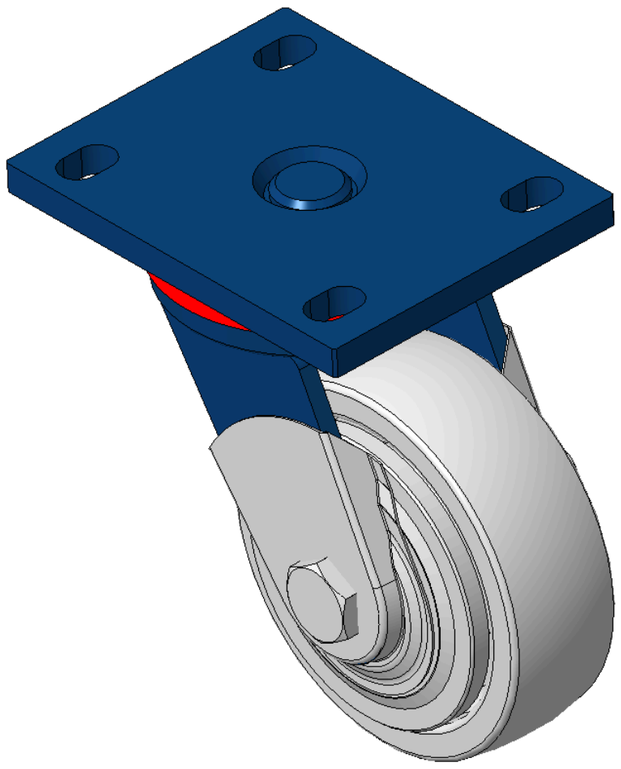

Picture may differ from original product



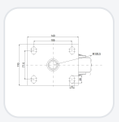

1102 B Type Caster Series

MRC (Transparent) Wheel Diameter × Wheel Width 125 x 40mm

KS-11020500072051 Copy model no.

Wheel Diameter	Load Capacity (Dynamic)	Overall Height	Wheel Bearing
125mm	200kgs	170mm	Wheels With Ball Bearings

- Modible Casters, Welded Caster Fork
- Blue painted finish, Mounting Type - Top Plate, 105x77.5mm Bolt Hole Spacing
- Cast Iron Wheel Center, High-Quality, high-elasticity rubber Wheel Tread
- Bearings—Ball Bearings, equipped with a special anti-winding wheel cover
- Wheel surface: Made of high-quality, high-elasticity rubber
- Wheel Center: Iron core / Cast iron core

Product descriptions are for reference only. The actual product shall prevail.

Product Data Sheet (Metric) | 3D Drawing Request

3D drawings are for members only. Please log in to download.

Product Data Sheet

Metric | Imperial

Wheel Diameter	125mm	Wheel Width	40mm
Wheel Bearing	Wheels With Ball Bearings	Plate Size	140 x 110mm
Bolt Hole Spacing	105 x 77.5mm	Plate Hole	20 x 13mm
Offset	42mm	Swivel Interference	211mm
Overall Height	170mm	Swivel Radius	105.5mm
Hardness Of Tread	75±5° Shore D	Load Capacity (Dynamic)	200kgs
Load Capacity (Static)	300kgs	Temperature	-20°C to +80°C
Fork Type	Swivel Caster	Stainless	N/A
Electrical Conductivity	N/A	Anti-Static	N/A
Weight	2.75kgs	Standard	ISO22883

* For any deviation between metric and imperial spec, please refer to the metric spec.

Performance

Rolling Smoothness
Max. 5 points Score: 5

Quiet Operation
Max. 5 points Score: 2

Floor Surface Preservation
Max. 5 points Score: 2

Downloads

PDF **1102-EN-KS2026112311.pdf**
Product Data Sheet (Metric)

3D **1102-CN-KS2026112311-d261123153506.rar**
3D drawings are for members only. Please log in to download.

Related Products

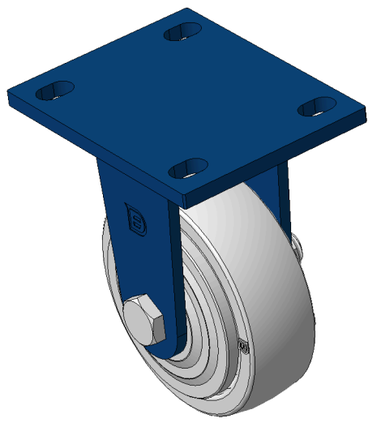

1102 B Type Caster Series
MRC (Transparent) Wheel Diameter × Wheel Width 125 x 40mm
KS-11020500071061

wheel diameter	dynamic load	overall height
125 mm	300 kg	170 mm

View specs →

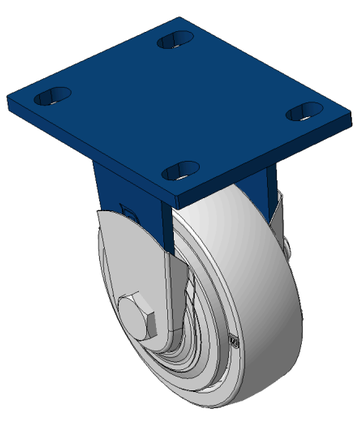

1102 B Type Caster Series
MRC (Transparent) Wheel Diameter × Wheel Width 125 x 40mm
KS-11020500071071

wheel diameter	dynamic load	overall height
125 mm	300 kg	170 mm

View specs →

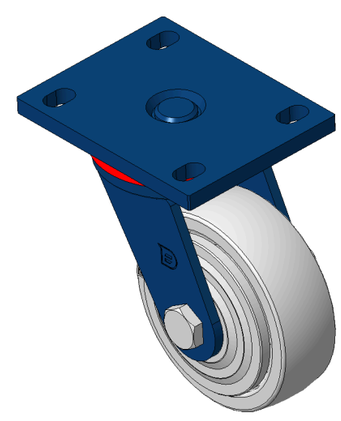

1102 B Type Caster Series
MRC (Transparent) Wheel Diameter × Wheel Width 125 x 40mm
KS-11020500072041

wheel diameter	dynamic load	overall height
125 mm	200 kg	170 mm

View specs →